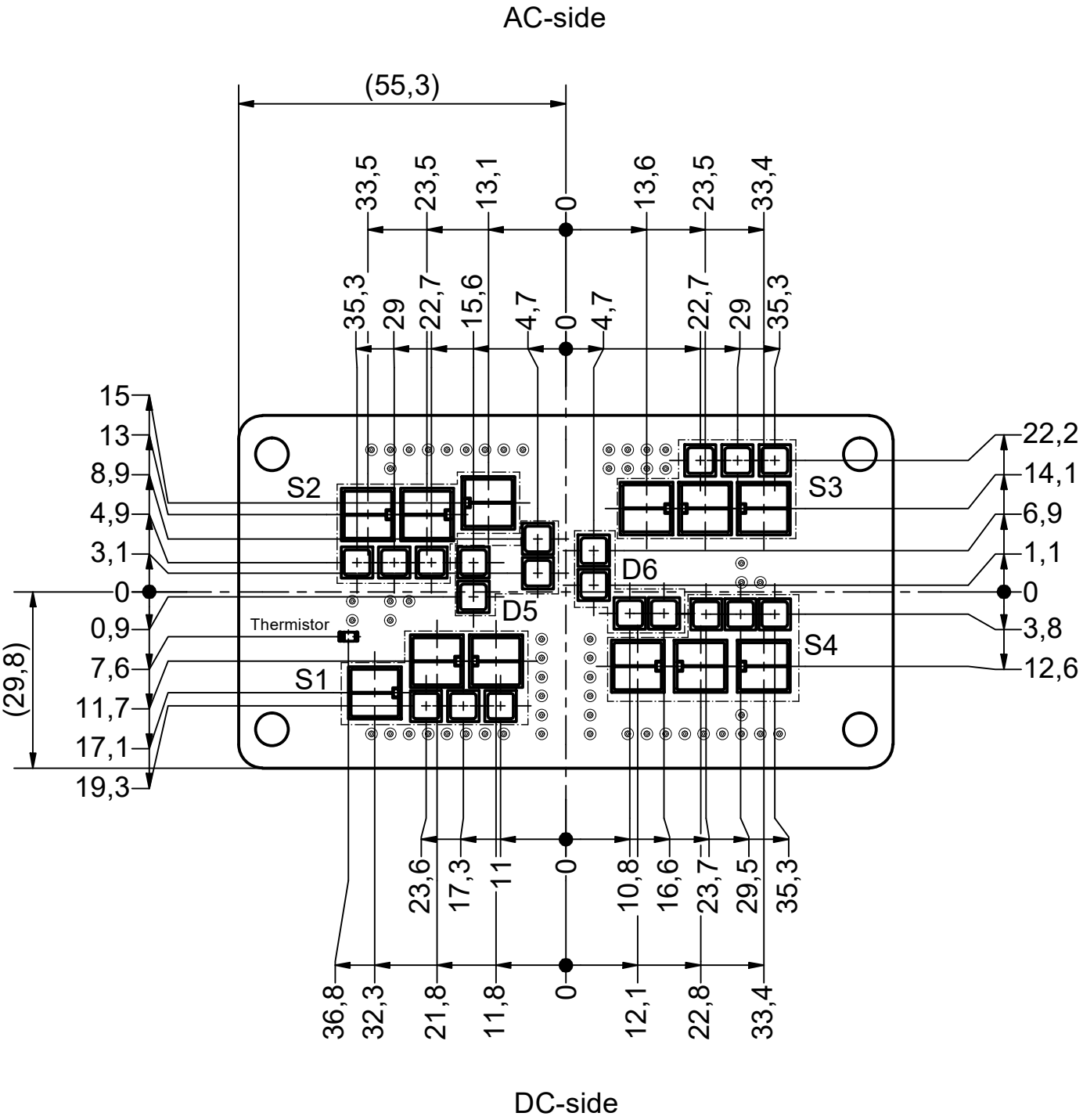

prepared: 22.11.2024	Chantal Toker	Scale: 1 : 1	Article number: —
checked:		Sheet: 1 / 1	Describtion: Chip Position, FP 1.05kV 650A
approved: 25.11.2024	Sven Matthias	Format: A4	
SwissSEM Technologies AG		STD Tolerances ISO 2768-mk ISO 1302 ISO 13715	Document number: DRW 0298 — Revision: 01